Glufada villas

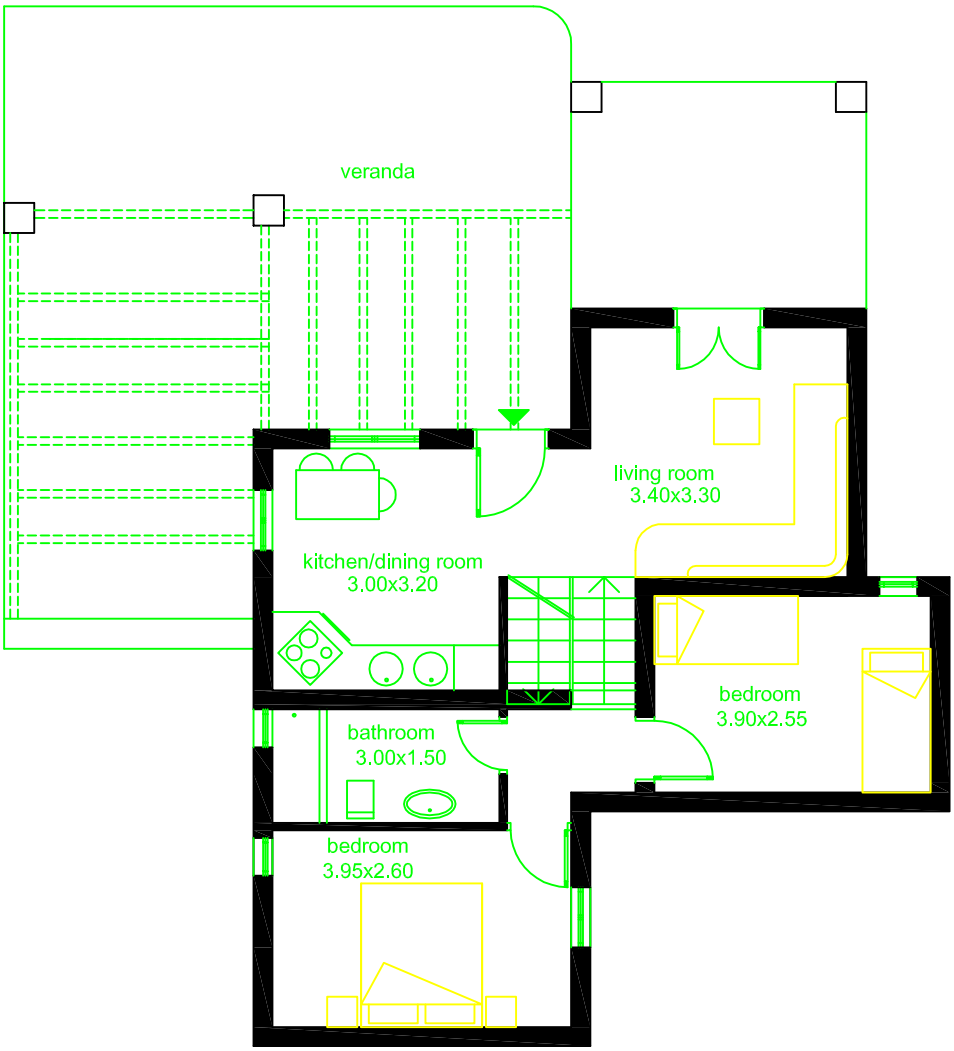

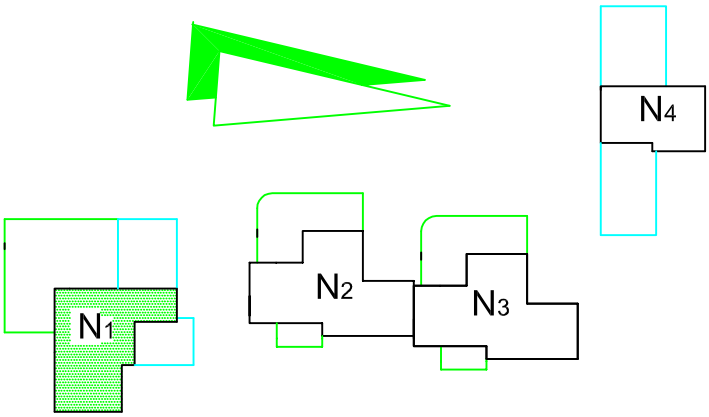

N1	114 m2

ground floor 64m2